Selection and application of an optimization method for control of the Common Rail diesel engine calibration

Ing. Ondřej Gotfrýd

Annotation: *This work deals with a selection of an optimization method for control of the Common Rail diesel engine calibration. The chosen optimization algorithms were tested on the data, which were experimentally measured in representative engine operating points. The goal is to create a method, which will find the best solution based on the input parameters (e.g. angle of main injection, injection pressure and quantity of the pilot injection) with respect to fuel consumption and desired emission limits. This project includes also a software and hardware adjustment of the test bed, on which the selected method will be applied.*

Anotace: *Příspěvek se zabývá výběrem optimalizační metody pro online řízení kalibrace motoru se vstřikovacím systémem Common Rail. Jednotlivé optimalizační algoritmy byly testovány na experimentálně naměřených datech pro vybrané provozní body motoru. Cílem bylo vytvořit metodu, která na základě vstupních parametrů (např. úhel hlavního vstřiku, tlak vstřikovaného paliva a dávka pilotního vstřiku) nalezne nejlepší řešení z hlediska spotřeby a požadovaných emisních limitů. V rámci této práce byl také vytvořen software, který umožní aplikaci vybrané metody na měřícím stanovišti.*

Keywords: *engine calibration, optimization, genetic algorithm*

1. Introduction

Diesel engines have reached a huge boom in the last years thanks to an electronic control of injection and they are able to fulfill stronger and stronger emission limitations. One of the most used electronic injection system is Common Rail (CR). Electronic control opens new occasions to set the engine in almost every operating point according demands. All the more difficult is the engine calibration in the whole operating range.

The engine calibration is a necessary part of every development, constructional modification or modernization of an engine. Nowadays is more and more preferred mathematical computation and simulation, which are less time- and money-consuming. Because the mathematical computation and simulation includes always some simplification, the final calibration is necessary to complete experimentally. On the modern diesel engine with CR there are more and more free-adjustable parameters (e.g. number, beginning and quantity of the injection, injection pressure, EGR etc.), which can influence to a great extent the basic engine characteristic. To set and to measure all possible combination of these parameters to find the optimal solution is from point of time and cost impossible. Therefore it is necessary to use a sophisticated optimization algorithm for optimal setting of modern engine.

2. Goals of the project

Ing. Ondřej Gotfrýd, CTU Prague, Faculty of Mechanical Engineering, Department of Automotive, Combustion Engine and Railway Engineering, Technická 2, 166 07 Prague 6, Czech Republic. phone: +420-22435-1855, email: ondrej.gotfryd@fs.cvut.cz

The main goal of the project was to choose an optimization method for the optimization of diesel engine with injection system Common Rail. This method will be later used for online control and evaluation of experimental measurements. The data for method testing were obtained on the test bed at the CTU Prague. All possible variants and combinations of input parameters were measured in selected engine operating points. Different optimization methods were applied on these data with the target to find a method, which needs as few as possible steps to find the optimal combination (or the optimal combinations) with respect to low fuel consumption and minimal emission (above all CO, NO_x and soot).

3. Test Bed

A 4-cylinder turbocharged diesel engine with electronic fuel injection system Common Rail (3. generation with electro-magnetic injectors) have been used for the experimentally work. The test bed is quipped with two computers. One computer is used for automatic data acquisition, on the second computer was developed a program which allows:

- to control the engine speed on dynamometer
- to read and to set data from ECU (e.g. the injection parameters)
- to communicate with acquisition PC (via TCP/IP)
- to share data with the program modeFrontier (input and output parameters)

For this purpose was used programming software LabView 7.1 [4] and Visual Basic .NET [5]. Figure 1 shows the scheme of the test bed and the user interface of the control program.

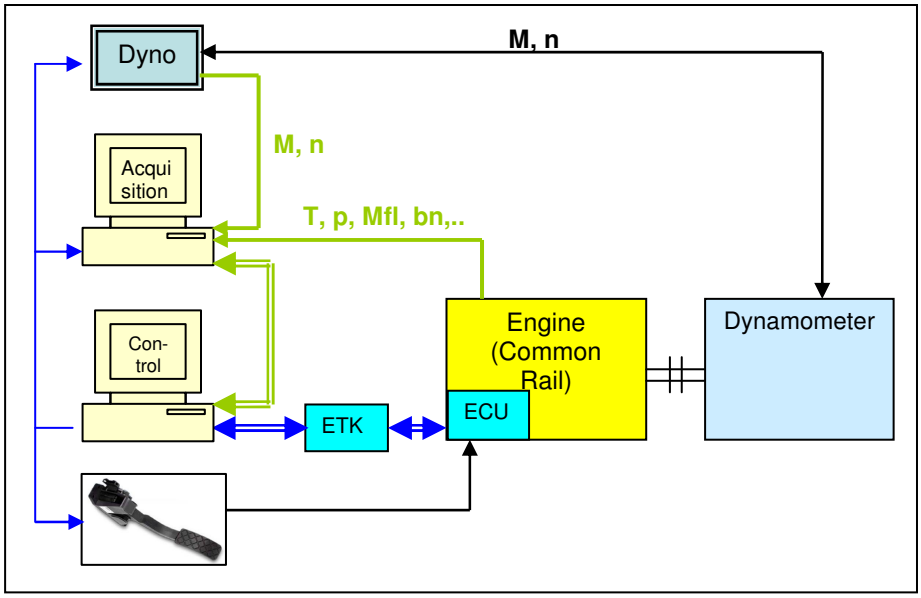

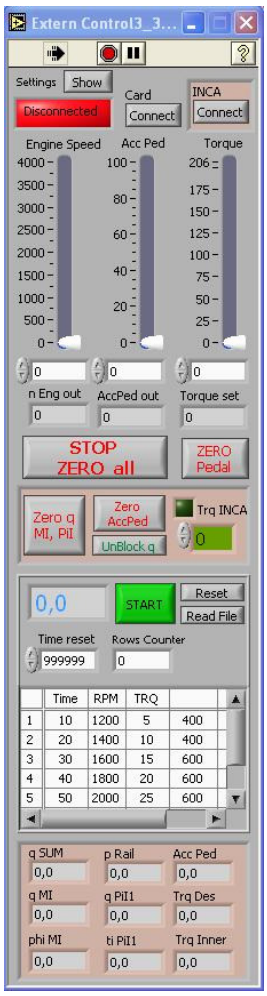

Figure1: Scheme of the test bed (left)
and user interface of Control Program (right)

4. Optimization Problems

The efficiency and time demands of the optimization depend mainly on the choice of optimization method, settings of this method, number of input parameters and conditions defining the optimum.

Therefore the number of input parameters was tried to be minimized. The most important input parameters, which have main influence on emission and fuel consumption, are: injection pressure, beginning of the main injection and quantity of the pilot injection. Based on experience a lower and upper boundary and a step for each input parameter were determined in every selected operating point (table 1). The quantity of the main injection was chosen as necessary to keep the given torque.

Table. 1. Input parameters

Input parameters	Unit	Lower bounds	Upper bounds	Step	No. of values
p Rail	[MPa]	50	90	10	5
phi MI	[° b.TDC]	- 4	4	2	5
q PiI	[mg/inj.]	0,8	1,2	0,2	4
Total number of combinations					100

Output parameters and conditions for optimum finding are the next important factor for the optimization process. On one side there is an effort to optimize the engine with respect to lowest fuel consumption, on the other side is demand to fulfill the emission limits that mean low production of NO_x, CO, CO_2, HC and soot. These demands are often against each other. Therefore it is not enough to find the minimum of one component, but it is necessary to find a compromise between all components. Also the output parameters influence the duration of the optimization, therefore were chosen only the most important output parameters – fuel consumption, production of CO, NO_x and soot.

Figure 2 shows for demonstration courses of CO, NO_x, soot and fuel consumption in 3D-graphs in relation to the injection pressure and the beginning of main injection for constant quantity of pilot injection 1,0 mg/inj. (operating point 1600 rpm and 35Nm). .

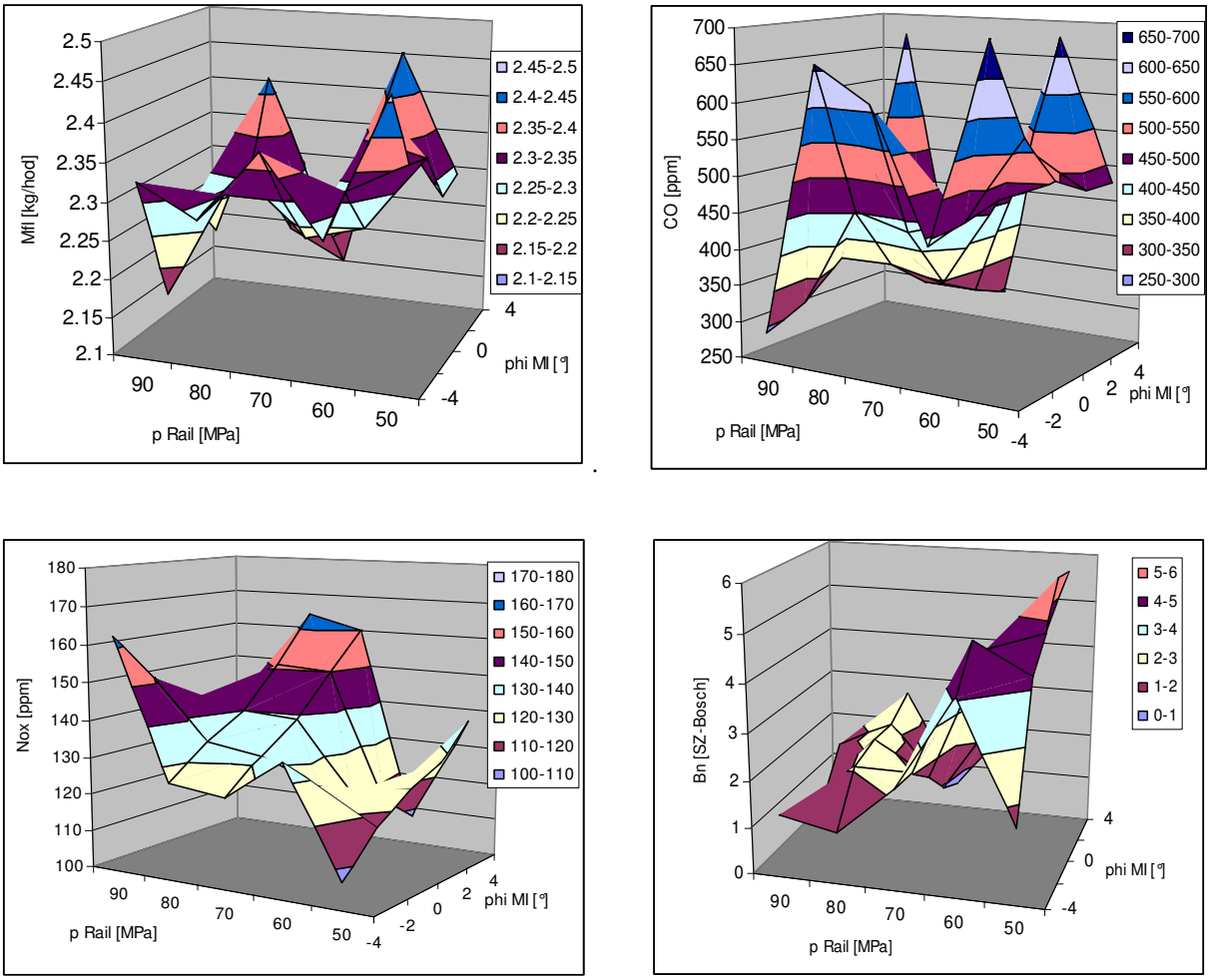

Figure 2: Courses of fuel consumption, CO, NOx and soot in relation to the injection pressure and beginning of the main injection

It is obvious from the graphs (figure 2), that it is very difficult to predict the behavior of individual components. It can be expected that the local minima also appear during the optimization. For that reason the optimization algorithm should be enough robust to be able to find the global minimum of given component. The problems of emission production are described in [1].

5. Choice of the optimization method

The program modeFrontier (co. ESTECO) was used as an optimization tool. This software offers sufficient selection of optimization algorithm, it allows to execute external scripts and programs, therefore it is suitable for later online control of the experiment. Besides it is also convenient for offline evaluation of big data amount.

First at all is necessary to define so-called Workflow. This is shown on figure 3 for our application. There are defined three input parameters (qPiI, pRail, phiMI), 4 output parameters (Mfl, CO, NOx, and soot) and demand for minimization (criterion). To shorten the optimization process it was determined in addition conditions (limits) for output parameters. If one of the output parameters is greater than the limit, the combination is considered as unsuitable.

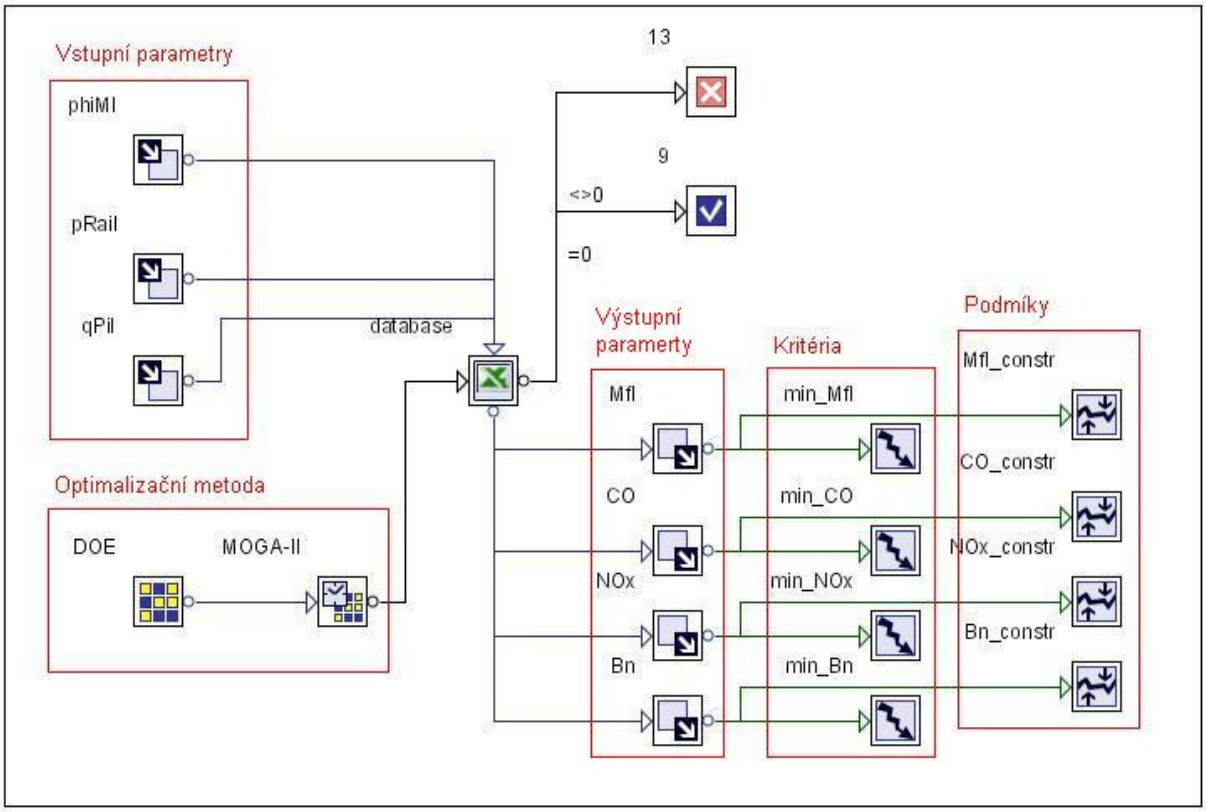

Figure 3: Workflow in software modeFrontier

It can be used only multi objective algorithms (allow defining more output parameters) and discrete algorithms, because the output parameters are known during the offline testing only in the points, which had been measured. Based on these facts were chosen and tested following algorithms:

- MOSA (Multi Objective Simulated Annealing)
  - belongs to the generic probabilistic meta-algorithms for the global optimization problem, based on 1-criterial algorithm Simulated Annealing combined with the Simplex method [3].
- MOGA-II (Multi Objective Genetic Algorithm)
  - belongs to the genetic algorithm, based on algorithm MOGA, but use a smart multisearch elitism, requires only very few settings parameters [3].
- NSGA-II (Non Dominated Sorting Genetic Algorithm II)
  - belongs also to the genetic algorithm, a fast non-dominated sorting procedure is implemented. [3]
- MACK (Multivariate Adaptive Crossvalidating Kriging)
  - Kriging is a group of geostatistical techniques to interpolate the value of a random field at an unobserved location from observations of its value at nearby locations. [3]
- MOGT (Multi Objective Game Theory)
  - based on the algorithm Game Theory combined with Simplex algorithm [3].

- FMOGA-II (Fast Multi Objective Genetic Algorithm)
  - derive from algorithm MOGA-II, uses internal adaptive Response Surfaces to speed up the search path [3].

Every algorithm has several parameters to set, which can influence the optimization time. For the genetic algorithm the parameters are above all probability of Cross-Over, probability of selection and mainly number of generation. For the interpolation and gradient algorithms the parameters are mainly number of iteration and final terminal accuracy. These parameters were changed during computation according recommendation in [3]. In this report are presented only the best results for each algorithm.

An important step in the optimization process is the initial sampling and number of initial combinations, so called Design of Experiment. The best result was obtained with the sampling Sobol Sequence, which is mainly recommended for MOGA-II. The number of combinations (n) at initialization was computed according to [3]:

$$n = 2 \text{ x number of input parameters x number of output parameters} \quad (1)$$

As it was already mentioned, in most cases it is not possible to determine only one optimal combination. Especially in the cases like e.g. engine calibration of passenger vehicle (must fulfill emission test according to NEDC - New European Driving Cycle) is very difficult to specify the limits for individual engine operating points, because the emission are evaluated after passing of the whole test. For this reasons is better to evaluate more combinations, which can be consider as optimal. 23 combinations of input parameters of 100 possible combinations were chosen as optimal for the demonstrational engine operating point (1600 rpm, 35 Nm). It was observed during the application of each optimization method how many optimal combination the method found. This value is given in [%] as ratio of success. The most interesting results for different algorithm settings and different number of iteration eventually generation (in case of genetic algorithm) are shown in table 2. A duplicate combination can appeared during the computation – algorithm use one combination of input parameters several times. In the case the combination is not evaluate again, but it is used the result of the first time evaluation of given combination. This contributes to shorten the optimization time. Therefore the number of used combination in table 3 represents the really number of measurements, which would be necessary for an online controlled experiment.

Tab. 2. Table of results

algorithm	No. of iteration/ generation	No. of used combinations	Rate of success [%]
MOGA-II	7	51	81.8
	20	69	90.9
MOSA	10	50	40.9
	50	76	90.9
NSGA-II	5	50	63.6
	10	62	90.9
FMOGA-II	10	48	54.5
	15	55	72.7
MACK	50	59	54.5
	100	75	77.0

It was found out during the testing, that the method MOGT is able to find only the local minimum. Therefore this method is not suitable for this application. It results from testing that the number of iteration eventually generation has most influence on the optimization time and successfulness. It is not possible to take the successfulness as an exactly criterion of the "perfection" of the algorithm, but it is possible to compare the algorithm in general features. The results show that the genetic algorithms need to measure eventually calculate less combinations of input parameters to find combinations, which can be consider as optimal. The algorithms MOGA-II a NSGA-II reached the best results. In addition MOGA-II is easier to use.

The most time during the optimization of an online controlled experiment takes the stabilization of measured variables after every change of input parameters. Expected stabilization time is 5 minutes. To measure e.g. 100 combinations (all combinations in one engine operating point) takes 8 hours and 20 minutes. This time increases many times with increasing of number of input parameters. This time can be markedly reduced using selected optimization algorithm (in best cases up to half). A next specification of the optimization method selection will follow within next research on online controlled experiments.

6. Conclusions

This work deals with a selection of an optimization method for control of the Common Rail diesel engine calibration with respect to fuel consumption and desired emission limits. The chosen optimization algorithms were tested on the data, which were experimentally measured in representative engine operating points. The best results were reached with algorithms MOGA-II and NSGA-II. These algorithms will be used for online control of the calibration experiments.

For these purposes was also developed a program, which allows to control the dynamometer, to read and to set the data from ECU and to share data from automatic acquisition.

References:

[1] Zellbeck, H.: Grundlagen der Verbrennungsmotoren, Dresden 2002

[2] Mori, D.,B. aspol.: Application of Simulated Annealing Algorithm in the Reliability Optimization of Redundant System, SAE Technical Paper 2004-01-3280, 2004

[3] modeFrontier v 3.1.3 User's manual, co. ESTECO, 2006

[4] LabView 7.1, User's help , National Instruments, 2004

[5] Pokorný, J.: Programovací jazyk Visual Basic .NET, České Budějovice, 2001